HYDROGEN-RICH GAS PRODUCTION WITH A CATALYTIC DUAL FLUIDIZED BED BIOMASS GASIFIER

C.Pfeifer, R.Rauch, H. Hofbauer
Institute of Chemical Engineering, Vienna University of Technology
Getreidemarkt 9/166, A-1060 Vienna/Austria
Phone: +43-1-58801 159 01; Fax: +43-1-58801 159 99

ABSTRACT: Tar formation is one of the major problems to deal with during biomass gasification. To overcome with this problem a nickel-enriched catalytic bed material has been developed and was tested in a 100kW$_{th}$ dual fluidized bed biomass steam gasifier. Different mixtures of olivine and catalyst (Ni-olivine) were used at different gasification temperatures (from 750 °C to 900 °C) and steam-to-fuel ratios (from 0.3 to 0.9). Gas composition and tar contents were analyzed using standardized methods. Water conversion rates, gas yields, and lower heating values were determined from mass and energy balances. The catalyst showed high activity in steam reforming of methane and tars and showed no noticeable deactivation during all experiments. The use of such an in-bed catalyst could be sufficient to produce a clean product gas and eliminating the need of downstream tar removal techniques.
Keywords: gasification, fluidized bed, catalytic tar removal

1 INTRODUCTION

Biomass as energy source is politically required by climatic conventions and in the European Union White Paper. Electricity generation is possible in new applications like biomass gasification. This technology has a big potential due to its great flexibility and the high electrical as well as the overall efficiencies. Gas conditioning has been identified as one of the remaining problems with biomass-gasification processes. The so called hot-gas conditioning is the most promising solution for this issue. The best results in tar removing can be achieved with catalytic steam reforming. The tar components are reformed with steam to produce hydrogen and carbon oxides. Nickel-based catalysts have proven to be very effective for hot conditioning of biomass gasification product gases above 750 °C[1].
The reported methods can be categorized in primary methods (in the gasifier) and secondary methods (outside the gasifier). The secondary methods are widely being studied and are well understood. The primary methods offer the advantage of simpler and more economical application but there is still a lack of knowledge. Attrition and deactivation of the catalyst have been reported by several research groups [2]. The catalyst can be regenerated by burning off the carbon layer. This can be achieved using a dual fluidized bed design in which the bed material circulates from the gasification zone to a combustion zone where the regeneration takes place [3]. Therefore, no deactivation can be expected in the case of a dual fluidized bed gasifier. Some results of investigations at a 100kW$_{th}$ pilot plant using a catalytic active bed material are presented in this paper.

2 PILOT PLANT AND CATALYST

The basic idea of the dual fluidized bed steam gasifier is to divide the fluidized bed into two zones, a gasification zone fluidized with steam and a combustion zone fluidized with air. A circulation loop of the bed material is created between these two zones, but the gases remain separated. The bed material acts as heat carrier from the combustion zone to the gasification zone.
Wood pellets with a feed rate of 25 kg/h$_{wet}$ were used as fuel for all experiments. The water content of the wood pellets was 7.3 wt% and the composition is reported in Table 1. A small amount of light fuel oil as additional fuel was used to control the temperature of the gasification zone. The exothermic reactions in the combustion zone provide the energy needed for the endothermic gasification with steam.
Figure 1 shows a simplified flow sheet of the 100 kWt$_h$ pilot plant used for the experiments. The biomass is inserted by a screw directly into the fluidized bed of the gasification zone: To keep the biomass in close contact with the bed material is important, especially in case of catalytically active bed material. During the gasification process, the siphon and the gasification zone are fluidized

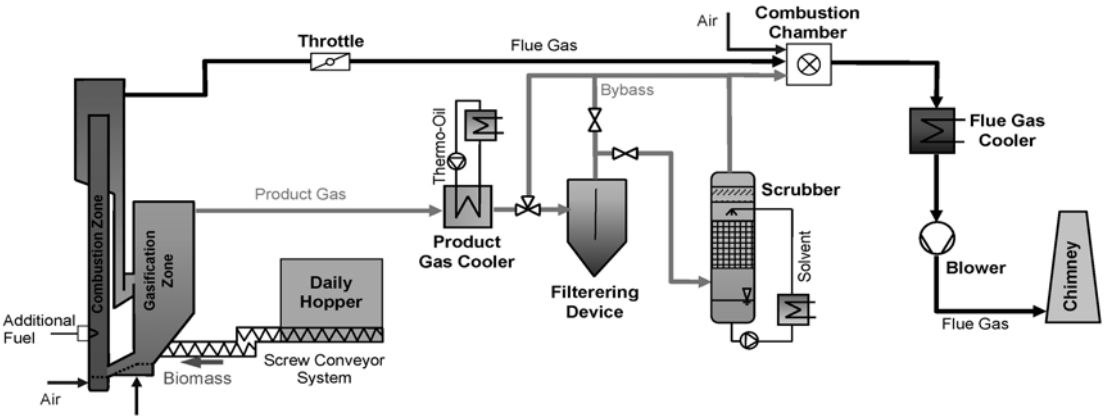

Figure 1: Simplified flow sheet of the pilot plant

with steam. The product gas leaves the gasification zone and is cooled to temperatures of about 200 °C with a heat exchanger which is operated with thermo oil. After cooling, the soot and fine abraded bed material are separated from the product gas and the tars are washed out with a scrubber. The clean product gas is mixed with the flue gas and combustion air and burned in a cyclone, which, in this case, is a separator for particles as well as a combustion chamber.

C	49	[mass% wf]
H	6.52	[mass% wf]
N	0.12	[mass% wf]
S	< 0.05	[mass% wf]
O	44.31	[mass% wf]
Ash	0.26	[mass% wf]
LHV	17120	[kJ/kg]
UHV	18620	[kJ/kg]

Table 1: Composition of the biomass

The dust and tar contents are measured after the heat exchanger and the measurement is carried out in accordance to the tar protocol "gravimetric tars" [4]. A small amount of product gas is sampled isokinetically for a certain period of time. Dust and heavy tars (boiling temperature > 200 °C) are deposited in a filter cartridge filled with glass wool. Low-boiling tars (boiling temperature < 200 °C) are washed out with toluene using washing flasks at a temperature of -20 °C. Along with the tar content, the particle and moisture contents are also measured.
The gas composition of the product gas is analyzed with an offline gas-phase chromatograph as well as with an online gas-phase chromatograph both coupled with a tcd-detector to get reliable figures.

The catalyst was developed and produced at the University of Strasbourg (ECPM, Strasbourg, France). The development and production are described in several publications and patents [5], [6], [7]. The catalyst is a modified olivine enriched with nickel using nickel nitrate. The catalyst contains 3.7 wt% of metallic nickel on the olivine after calcination at 1100 °C. The chemical composition of the natural olivine as well as the Ni-olivine is listed in Table 2. This olivine has a density of 3250-3300 kg/m³, a grain size of 400-600 µm, and a porosity of 13-14 %.

component	olivine [wt%]	catalyst [wt%]
MgO	48.0-50.0	45.7-47.7
SiO_2	39.0-42.0	37.2-40.0
Fe_2O_3	8.0-10.5	7.6-10.0
Al_2O_3, Cr_2O_3, Mg_3O_4	0.8	0.8
CaO	<0.4	<0.4
NiO	<0.1	4.7

Table 2: Chemical composition of the used olivine [Magnolithe, 1999] and the catalyst

3 EXPERIMENTAL RESULTS

The experiments were carried out at different gasification temperatures. The gasification temperature is measured as the temperature in the fluidized bed at the biomass feeding position. Further parameters that were varied include the steam-to-fuel ratio and the mixing ratio of natural olivine and catalyst. The ranges of variation of the parameters are given in Table 3 whereas as reference conditions, a gasification temperature of 850 °C and a steam-to-fuel ratio of 0.6 were defined. These parameters result from previous experiments. The steam-to-fuel ratio is defined according to the following equation:

$$sfr = \frac{\dot{m}_{w_fuel_in} + \dot{m}_{w_fluid_in}}{\dot{m}_{fuel_dry_in}} \quad [1]$$

parameter	values						
temp. [°C]	750	800	850[a]	900			
steam/fuel		0.3	0.6[a]	0.9			
cat/olivine			0[a]	5	10	20	43
[a] reference value							

Table 3: Ranges of parameters

Ni-based catalysts are reported to be very effective in reducing the tars above temperatures of 750 °C. This leads consequential to an increase of the hydrogen and CO fraction whereas the CO_2 and methane fractions are decreasing [8], [9]. Figure 2 shows the influence of the amount of catalyst on the tar content in the dry product gas. The tar content could be reduced more than 75 % using 43 wt% catalyst of the bed material compared to natural olivine alone.

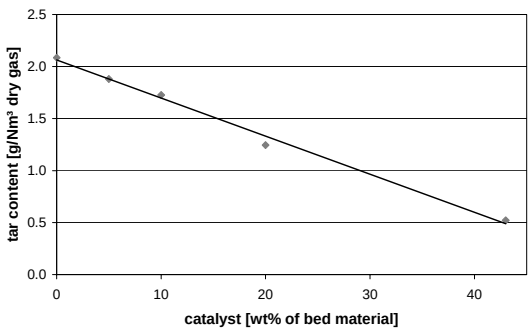

Figure 2: Tar content as a function of amount of catalyst (gasification temperature=850°C, steam-to-fuel ratio=0.6)

The dependency of the gas composition on the steam-to-fuel ratio is displayed in Figure 3. It can be clearly seen that the hydrogen content is increasing with the steam-to-fuel ratio. This coherence is shown for 850 °C with 20 wt% catalyst in the bed material at a steam-to-fuel ratio of 0.6. Similar results were found independent on the amount of catalyst in the bed material. It can be stated that the catalyst forces the same tendencies than those occurred with natural olivine as bed material in former experiments but the trends are now intensified [10].

The mass and energy balances are calculated by an equation-oriented simulation software. One important figure for comparing steam gasification processes is the water conversion which is calculated according to the following equation:

$$C_W = \frac{\dot{m}_{w_in} - \dot{m}_{w_out}}{\dot{m}_{fuel_dry_in}} \quad [\%]$$

The water conversion increases by the use of a catalytic active bed material and with increased steam-to-fuel ratios. The water conversion lies for all experiments in the range of 5 to 10% which means that the main part of the inserted steam leaves the reactor unreacted. A procedural optimum has to be found between the heat loss due to unreacted steam and the wanted gas quality.
Parallel with the enlarged water conversion an increasing steam-to-fuel ratio leads to increased gas yields because of the steam reforming reactions. The chemical efficiency, which is defined as the lower heating value of the product gas divided by the lower heating values of the biomass and the additional fuel, stays nearly constant. This value is independent on the amount of catalyst in the bed material almost 70 % which is comparable to the results found at the demonstration plant in Güssing [3].

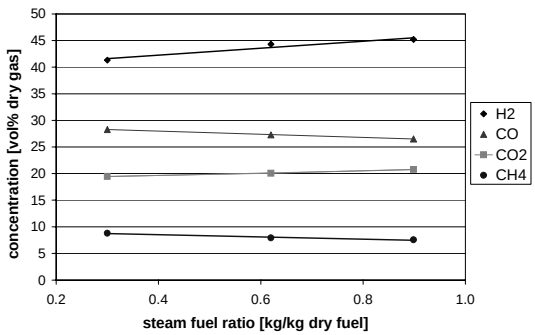

Figure 3: Dry gas composition as a function of steam-to-fuel ratio (gasification temperature=850°C, 20wt% catalyst)

Lifetime of the catalyst is definitely very important for the technical feasibility of catalytic hot gas cleaning. Deactivation due to coking of the catalyst is one of the main causes of deactivation [11]. By the use of the dual fluidized bed design these coke deposits can be burned off in the combustion zone and attrition of the bed material gets more importance. A comparison of the attrition rates of natural olivine and that of the catalyst mixtures showed no measurable difference. The attrition rates were for all experiments in the range of 0.015 $kg/kg_{dry\ fuel}$. Because of the dependency of the attrition on the gas and particle velocities in the fluidized bed the main part of attrition takes place in the combustion zone which represents a fast fluidizing regime.
During 2 long-term experiments (30 resp. 45 h) no loss of activity could be detected. Figure 4 shows the dry gas composition and Figure 5 the corresponding tar content over the experimental time of 30 hours. This test was carried out with 5 wt% of Ni-olivine in the bed material at a gasification temperature of 850 °C and a steam-to-fuel ratio of 0.3 at the beginning and 0.6 at the end of this test. The gap in the graphs after about 19 hours of gasification arose because it needs about 1 h to get again constant process conditions inside the gasifier after changing process parameters. The higher tar contents with the lower steam-to-fuel ratio corresponds to the results reported above. Similar results were obtained during a second long-term experiment which lasted for 45 hours using 20 wt% of catalyst in the bed material at the same gasification temperature and steam-to-fuel ratios.

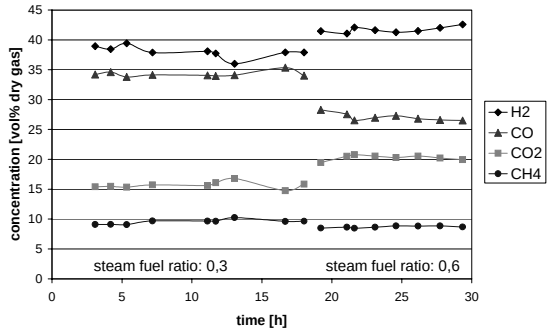

Figure 4: Product gas composition over time (gasification temperature=850°C, steam-to-fuel ratio=0.3 and 0.6, 5wt% catalyst)

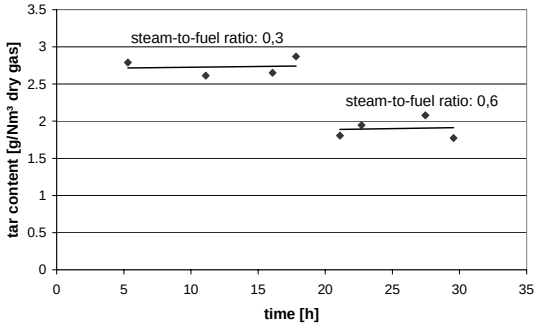

Figure 5: Tar content as a function of time (gasification temperature=850°C, steam-to-fuel ratio=0.3 and 0.6, 5wt% catalyst)

4 CONCLUSION

An optimized gasification process combined with a primary catalytic hot gas conditioning can produce a considerably clean gas, thus eliminating the need of downstream gas cleaning. The described investigations at the pilot plant exhibits that the used catalyst gives the ability to reduce the tars and to increase the hydrogen content in the product gas. Good performances were observed with different olivine-catalyst mixtures.
Due to the fact that the catalyst exhibits the same fluid dynamic behavior as the natural olivine, the catalyst can be used in different mixtures in the dual fluidized bed steam gasifier without any separation effect during operation. Furthermore the catalyst showed in all investigated mixtures the same attrition rate as natural olivine alone which was 0.015 $kg/kg_{dry\ fuel}$. Attrition represents the main part of deactivation. During the long-term experiments no loss of reactivity for tar and methane reforming could be observed. To prove the quality of the catalyst for a commercial application the tested time on stream has to be prolonged.
Generally, the catalyst showed high activity in the steam and dry reforming of methane and tars. The tar content in

the product gas could be lowered to a level required to use the gas in a gas engine. At the same time the hydrogen content could be increased by 8 percentage points to 45 vol% whereas the methane content was decreased by about 3 percentage points to 7 vol%.

Using Ni-olivine as bed material is - compared to commercial steam reforming catalysts - an inexpensive method to enhance the efficiency of the dual fluidized bed steam gasification process. Primary measures are of potential importance for the gasification chain but further development has to be done to find an efficient primary technique for removing the tars respectively adjusting the product gas composition.

Acknowledgment

Authors are highly indebted to the E.U. for the financial support (contract ENK5-CT2000-00314). The work also received financial support from Renet-Austria, which is a competence network in the framework program of Kind/Knet. This financial support is gratefully acknowledged. The authors also thank Prof. Kiennemann (University of Strasbourg, ECPM) and his team for the preparation and development of the catalyst.

Nomenclature

C_w=water conversion [1]
$\dot{m}_{w_fluid_in}$=mass flow of water for the fluidisation [kg/h]
$\dot{m}_{fuel_dry_in}$=mass flow of dry biomass [kg/h]
$\dot{m}_{w_fuel_in}$=mass flow of water in the gasifier with the biomass [kg/h]
$\dot{m}_{w_in}$=total mass flow of water in the gasifier [kg/h]
$\dot{m}_{w_out}$=total mass flow of water in the product gas [kg/h]
sfr=steam fuel ratio [1]

References

[1] D. Dayton, A review of the literature on catalytic biomass tar destruction, NREL, Golden, CO, USA, Report no. NREL/TP-510-32815
[2] D. Sutton, B. Kelleher, J.R.H. Ross, A review of literature on catalysts for biomass gasification, Fuel Process. Technol. 2001, 73, 155-173
[3] H. Hofbauer, R. Rauch, G. Loeffler, S. Kaiser, E. Fercher, H. Tremmel, Six years experience with the FICFB gasification process, Proceedings of the 12th European Conference and Technology Exhibition on Biomass for Energy, Industry and Climate Protection, Amsterdam, The Netherlands, 2002, p982-985
[4] Neeft, J.P.A.; Knoef, H.A.M.; Zielke, U.; Sjöström, K.; Hasler, P.; Simell, P.A.; Dorrington, M.A.; Abatzoglou, N.; Deutch, S.; Greil, C.; Buffinga, G.J.; Brage, C.; Soumalainen, M., Guideline for Sampling an Analysis of Tar and Particles in Biomass Producer Gas, Version 3.1; Energy project EEN5-1999-00507 (Tar protocol), 1999
[5] Courson. C.; Udron, L.; Petit, C.; Kiennemann, A., Grafted NiO on natural olivine for dry reforming of methane, Science and Technology of Advanced Materials, 3(3), 271-283, 2002
[6] Courson, C.; Petit, C.; Kiennemann, A.; Rapagna, S.; Foscolo, P.U., Catalyseur pour la gazéification de la biomasse en lit fluidisé, French patent No0006526-22/5-2000
[7] Rapagna, S.; Foscolo, P.U.; Provendier, H.; Petit, C.; Kiennemann, A.,Procedimento per la gassificazione di biomasse, Italian patent No2000A000157-24/3/2000
[8] Corella, J.; Orio, A.; Aznar, P., Biomass Gasification with Air in Fluidized Bed: Reforming of the Gas Composition with Commercial Steam Reforming Catalysts, Ind. Eng. Chem. Res. 1998, Vol. 37, 4617-4624
[9] Simell, P.; Ståhlberg, P.; Solantausta, J.; Hepola, J.; Kurkela, E., Gasification Gas Cleaning with Nickel Monolith Catalyst, Developments in thermochemical biomass conversion; Bridgwater, A.V. & Boocock, V., Eds.; Blackie Academic & Professional: London, 1996; Vol. 2, 1103-1116.
[10] Hofbauer, H.; Rauch, R., Stoichiometric water consumption of steam gasification by the FICFB-gasification process, Proceeding of the Progress in Thermochemical Biomass Conversion Conference, Innsbruck, Austria, 2000, p 199-208
[11] Ising, M., Zur katalytischen Spaltung teerartiger Kohlenwasserstoffe bei der Wirbelschichtvergasung von Biomasse, PhD, Frauenhofer Umsicht, Oberhausen, Germany, 2002